POWER-SUPPLY SYSTEMS

IN the course of time the service man will encounter a wide variety of socket-power-supply systems - both filament "A" supply, plate "B" supply and "C" supply units - as indicated by the various diagrams in this book. While the circuits differ widely, and the apparatus employed and combinations also differ, trouble shooting in each system is essentially the same, and can be boiled down to a few simple tests of the various parts. Sets employing batteries for the "A", "B" and "C" supply were sufficiently covered in the second chapter of this book, and will not be included in this chapter; only power-supply systems in connection with the house-lighting line, both A.C. and D.C., will be included. These may be divided into :

(a) Eliminators for battery sets,
(b) Power-Supply Systems for A.C. Electric Sets.

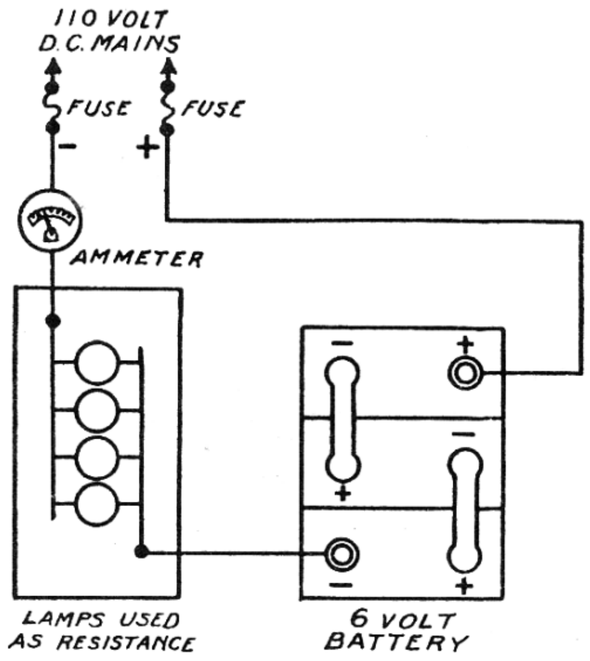

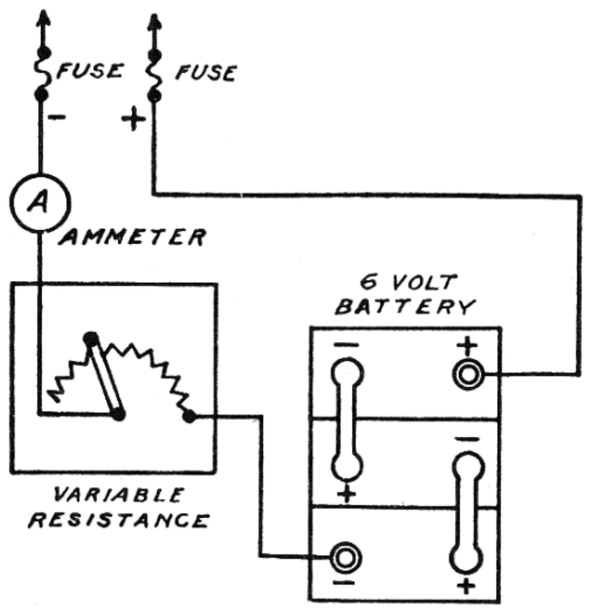

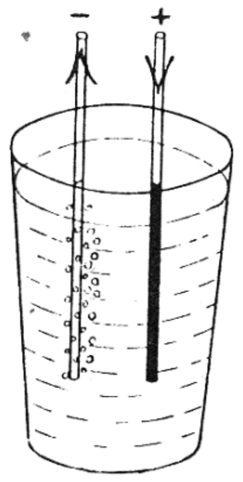

Fig. 12 - (left) Charging a 6-volt battery from a 110V. D.C. line using a variable resistance.
Fig. 13 - (center) Charging a 6-volt battery using a lamp bank resistance.
Fig. 14 - (right) Testing the polarity of the D.C. line with salt water.

The first group will include battery chargers as well as eliminators, both A.C. and D.C. types, for use with battery sets. The second group will include power packs and power supply systems for A.C. electric sets. Both groups will be subdivided as we proceed with the discussion. A voltage measurement on any of these devices will reveal an abnormal condition. Current output measurement will show whether the fault is in the set or in the power-supply device. In this chapter we will assume the defect, if any, to be in the power-supply device.

Fig. 15 - (left) Tungar charger.
Fig. 16 - (center) Vibrating reed charger.
Fig. 18 - (right) Dry disc charger.

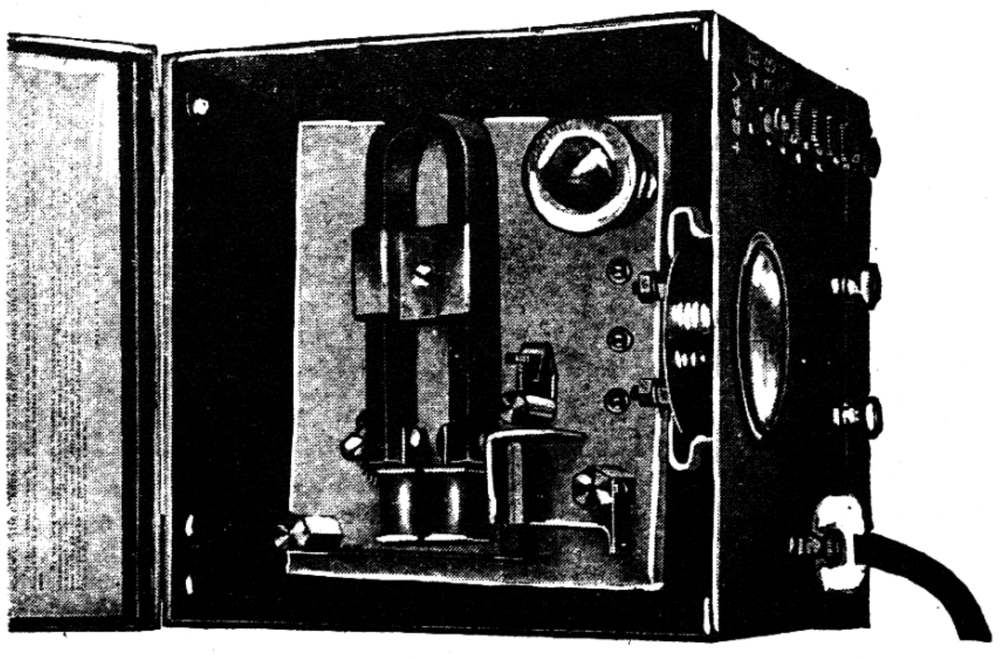

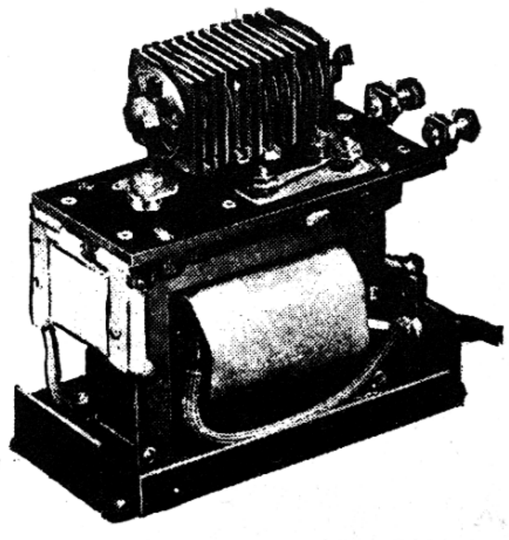

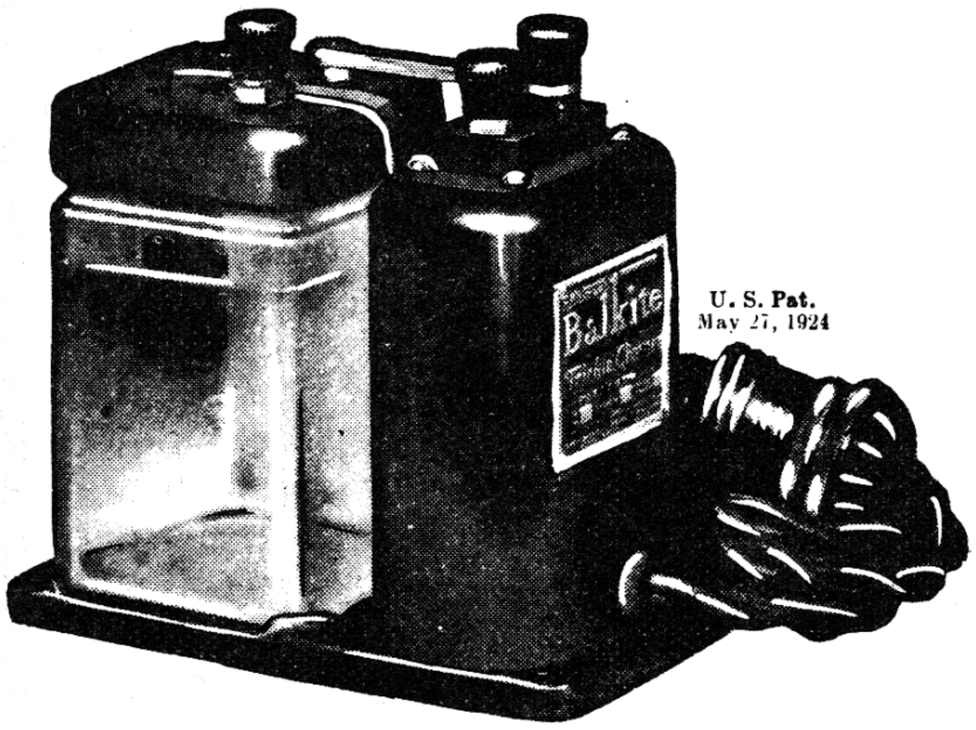

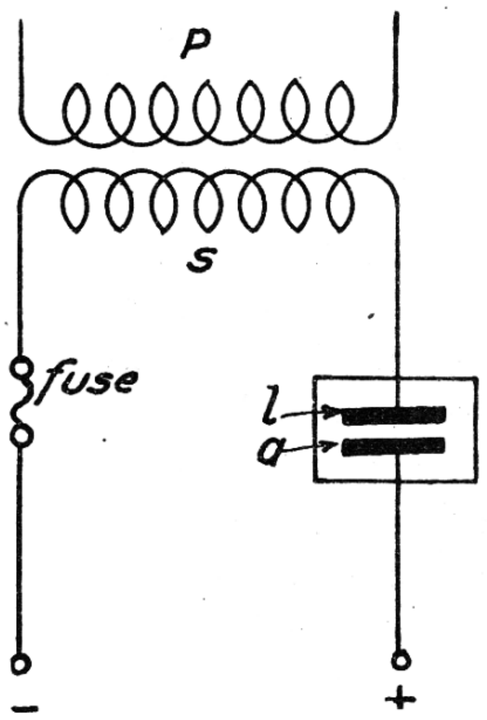

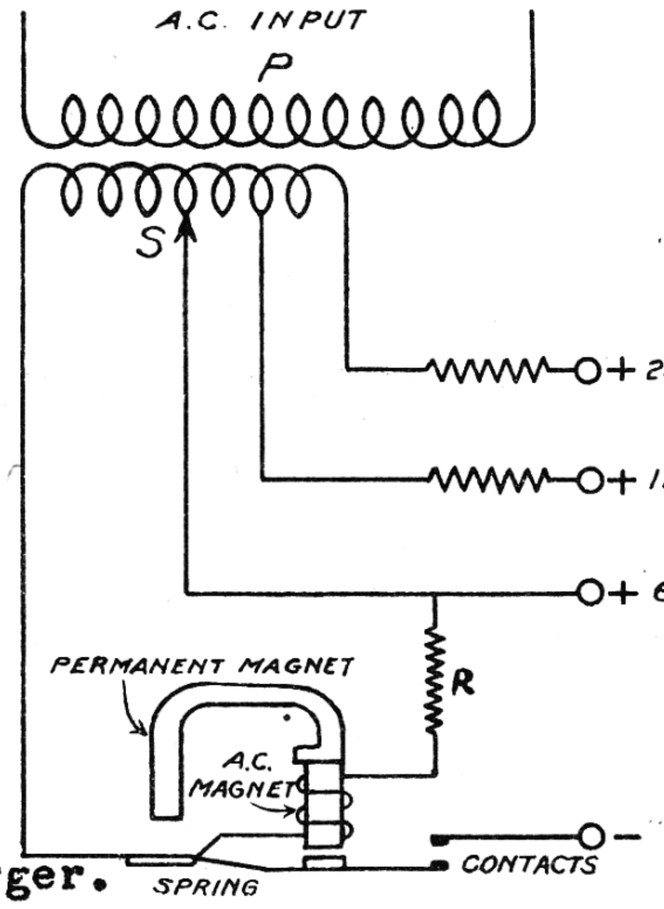

Fig. 17 - (left) Electrolytic charger.
Fig. 21 - (center) Diagram of electrolytic and dry-disc charger.
Fig. 20 - (right) Diagram of half-wave vibrating reed charger.

(2) 110V. D.C. Battery Chargers. This type of charger consists merely of a resistance in series with the battery under charge; the wole being connected to the 110-volt D.C. line. See Figs. 12 and 13. Tracing trouble, therefore, consists merely of checking the continuity of the circuit and its polarity. Trickle chargers usually have an ammeter which indicates the polarity and amount of charge. Trouble is usually found in the connections to the battery, which become corroded in time, and introduce resistance into the circuit. In some sets, automatic relays are employed to disconnect the charger from the line when the set is turned on. Through wear and sparking, the contacts in the relays fail to close and the charger circuit remains open. In lieu of a polarized meter, the line polarity can be determined by dipping the two terminals in water containing a few grains of salt; violent bubbling will take place around the negative wire. See Fig. 14.

(3) 110V. A.C. Battery Chargers. These chargers may be of the tungar-tube type, the vibrating-reed type, the electrolytic rectifier type or the dry-disc rectifier type; the latter two being used mainly for trickle chargers. The illustrations of Figs. 15, 16, 17 and 18 show these types of chargers. Figs. 19, 20 and 21 show the connections, respectively, In addition to the causes of troubles mentioned in connection with D.C. battery chargers, we have a likely source of trouble in the rectifying device. In the tungar type, the filament may burn out, or a defective tube may be encountered. The life of this type of tube is uncertain, even though its filament may be intact. This is true also of dry-disc rectifiers and vibrating rectifiers, which in time require new contact points. Failure in charging may also be due to an open transformer winding, or a dirty or loose tube socket. Some chargers have connections for charging storage "B" batteries, with consequent troubles from corroded connections to the battery.

(4) 110V. D.C. "A" Eliminators. These consist merely of a network of resistors designed to give the required voltage drop, together with a choke coil and condensers for filtering purposes, as indicated in Fig. 22. In some cases the tubes are wired in series, as was illustrated in Fig. 8. In this case, the current drain from the line is much less than when lighting the tubes in parallel. In the latter case (Fig. 22) an output voltage of 6-volts is usually desired; but the voltage remains at this value only when the set is turned on and all tubes lit; because the least change

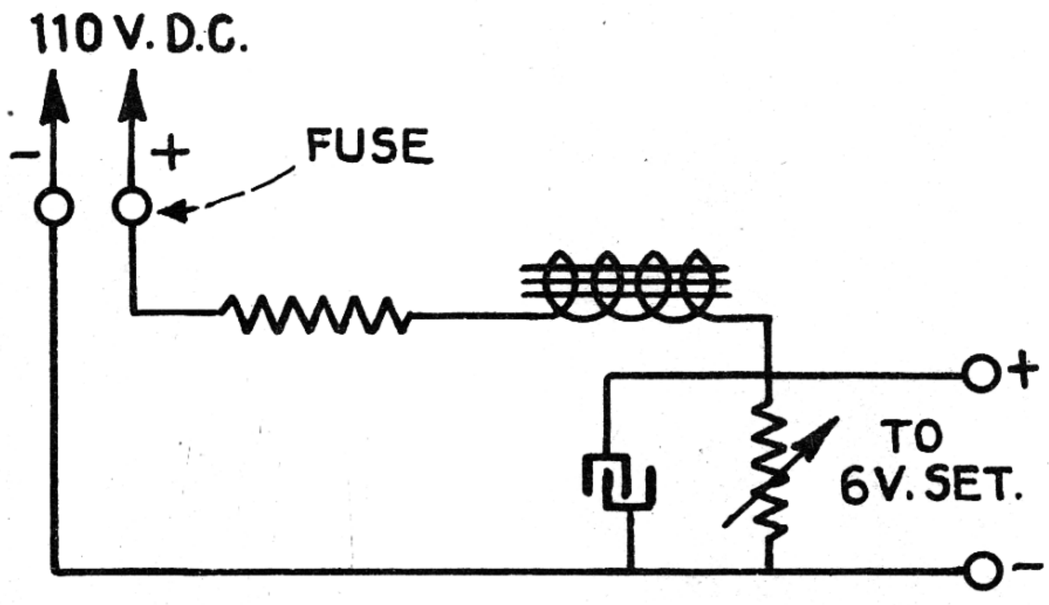

Fig. 22 - Circuit of 110V. D.C. "A" battery eliminator.

FIG. 23

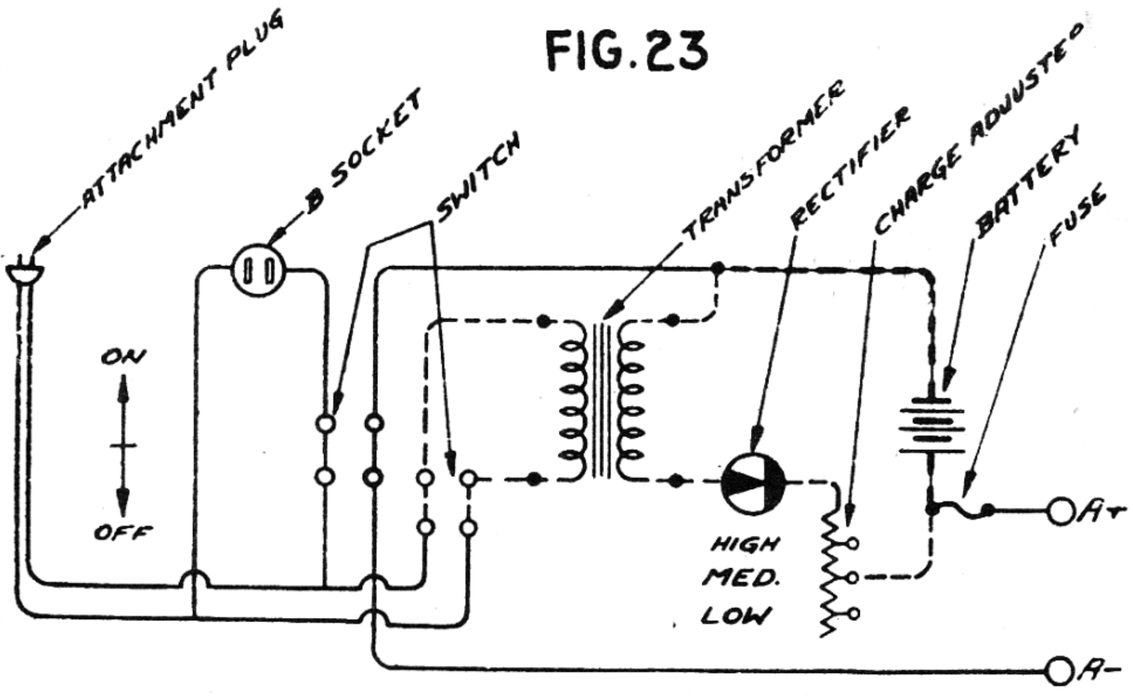

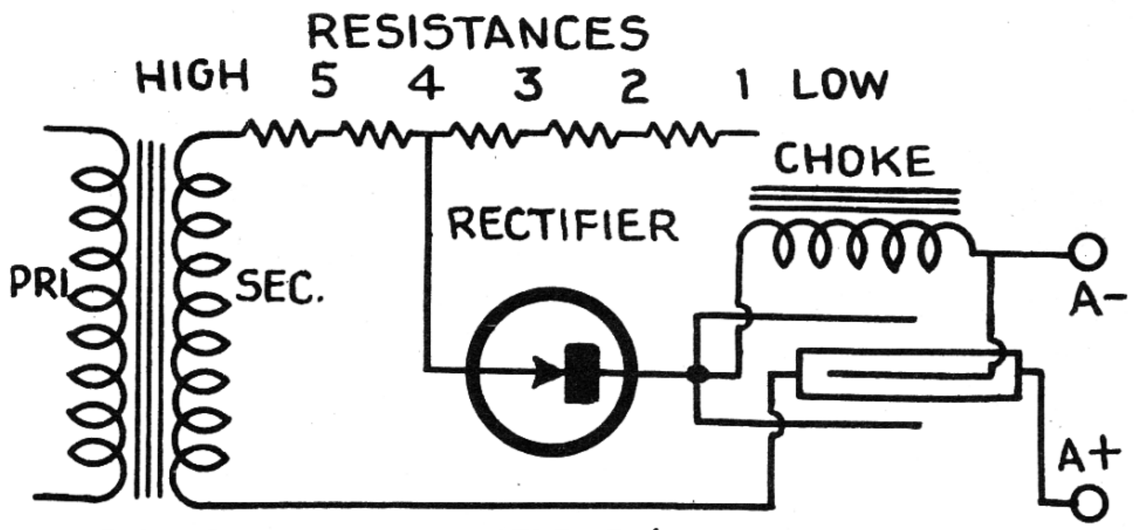

FIG. 24

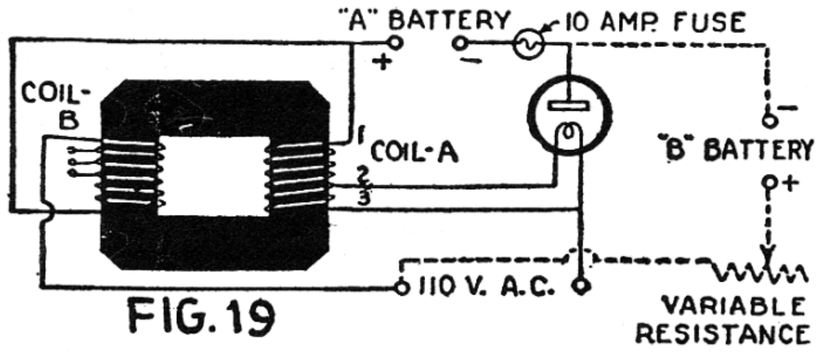

FIG. 19

Fig. 19 - Diagram of Tungar Charger.
Fig. 23 - Diagram of Philco Socket Power "A" supply.
Fig. 24 - Diagram of Balkite socket Power "A" supply.

in current drain charges the resultant voltage drop, causing the output terminal voltage to fluctuate widely, and endanger the tubes. For this reason, no tubes should be removed from the set without first turning off the switch, and the switch should not be turned on again until all good tubes are in the set. However, the variable resistors give a wide range of voltage control, and should be carefully adjusted. Simple continuity tests will indicate the condition of this device. If a fuse blows, because of a short in the eliminator, test the filter condensers for continuity before connecting the outfit in service again.

(5) 110V. A.C. "A" Eliminators. Such a device is naturally more complex than the D.C. type, since it comprises a power transformer, a rectifier, a filter system and, in some cases, a storage battery. The last arrangement cannot be considered a real battery eliminator, but is merely a combined storage battery and trickle charger. Fig. 23 shows the diagram of the Philco Socket Power "A", which is representative of this type in which no filter system is employed, the storage battery serving for this purpose. In the other types, no battery is used. Fig. 24 shows the diagram of the Balkite "A" Socket Power Unit, which is typical of this. Both of these employ electrolytic rectifiers. We shall describe each in detail.

(6) "A" Power Units With Battery. Troubles in this unit are similar to those occurring in regular batteries and chargers. In these, a comparatively smaller battery is used (about 40-ampere-hour) , and it is continually being charged while the set is in operation. Hum may be produced if the battery is operated near or in a discharged condition; in which case the condition of the battery and rectifier should be examined. If the rectifier electrolytic has evaporated, more should be added. Loose binding posts and connecting cables are also a source of trouble. The control resistor also may become loose, dirty, or worn, and require cleaning or replacing. Electrolytic or dry-disc rectifiers are usually employed in these units. These need replacing in time, depending upon the length of time they have been in service.

(7) "A" Power Units Without Battery. As shown in Fig. 24, these units comprise a step-down transformer, control resistance, rectifier, choke coil and filter condenser. Since the output voltage is low (about 6 volts) and the current high, the condenser may be designed for low voltage, but it should have an enormous capacity to produce any appreciable filtering effect. The output voltage in these units may vary because of a defective rectifier or leaky filter condenser. The resistance-control allows for adjustment over wide limits, however, and a slight readjustment is usually sufficient.

(8) Series-Filament "A" Supply. If type '99 tubes are used and connected in series, a current of 60 milliamperes is sufficient to light them, and this may be obtained from the "B" supply. If '01A tubes are used in series, a current of $\frac{1}{4}$ ampere is

required, which is too great to be taken from the usual "B" supply, so a separate rectifier is necessary. These systems are not in general use (except for 110V D.C. systems) and need not be described in detail. Trouble shooting resolves itself merely into testing the rectifier and continuity of the circuits, remembering that "C" voltages are obtained by returning the grid-circuit leads to different points of the filament circuit; each point, of course, being at a different potential.

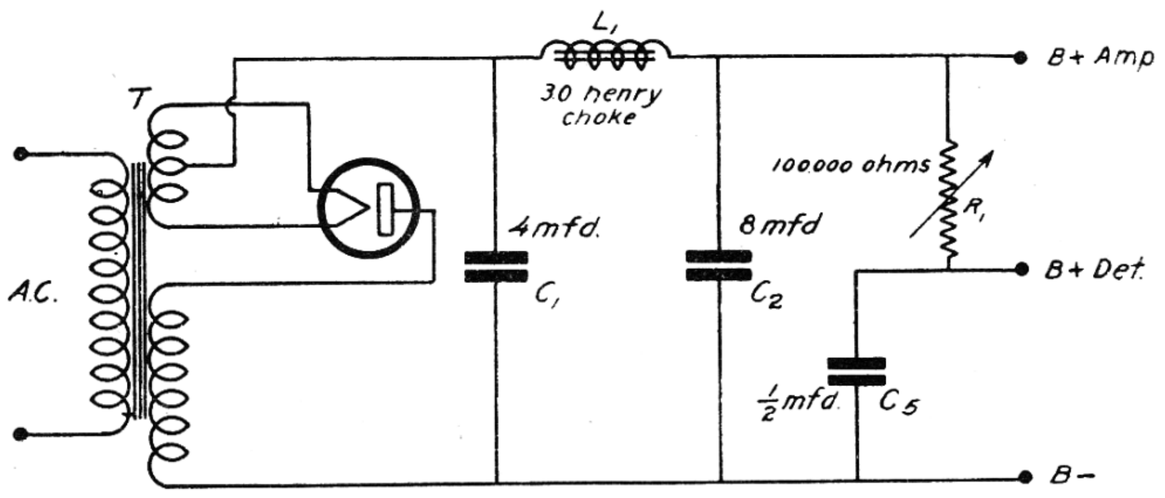

Fig. 25 - "B" Power Supply using half-wave filament type rectifier.

(9) "B" Battery Eliminators. We shall limit this discussion to "B" battery eliminators operating from the A.C. line, as the D.C. type were covered sufficiently in Chapter II. So far we have talked about rectifiers, but made no distinction between half-wave and full-wave ones. In the former, every other half-cycle of the alternating current wave is used, resulting in a D.C. output with a 60-cycle pulsation, which is smoothed out by the filter. In the latter (which is in effect two half-wave rectifiers operating alternately or "out of phase") each half-cycle is used; every other one being in effect reversed, giving a 120-cycle pulsation in the D.C. output. The 120-cycle pulsation is easier to filter than the 60-cycle pulsation and a smaller filter system may be used; however, the sound reproducer is more sensitive to the 120-cycle tone than to the 60-cycle one, and the amount of hum produced is about the same in each case. Filament-type, gas-type, and dry-disc type rectifiers are most generally used.

(10) Filament-Type Rectifiers. Figs. 25 and 26 show typical circuits of half-wave and full-wave filament rectifiers, the latter consisting of two half-wave rectifiers so connected as to obtain full-wave rectification. The type '81 tube is a typical half-wave rectifier. Fig. 27 shows a full-wave rectifier circuit employing a full-wave rectifier, such as the type-'80 tube. A comparison of these three circuits will give a fundamental idea of the basic principles involved, as they are all fundamentally the same and subject to the same defects. Like defects or troubles produce like symptoms in all.

(11) Gas Rectifiers. These are more generally used for commercial "B" eliminators. The Raytheon "B" and "BH" tubes are typical examples. Fig. 28 shows circuits of the

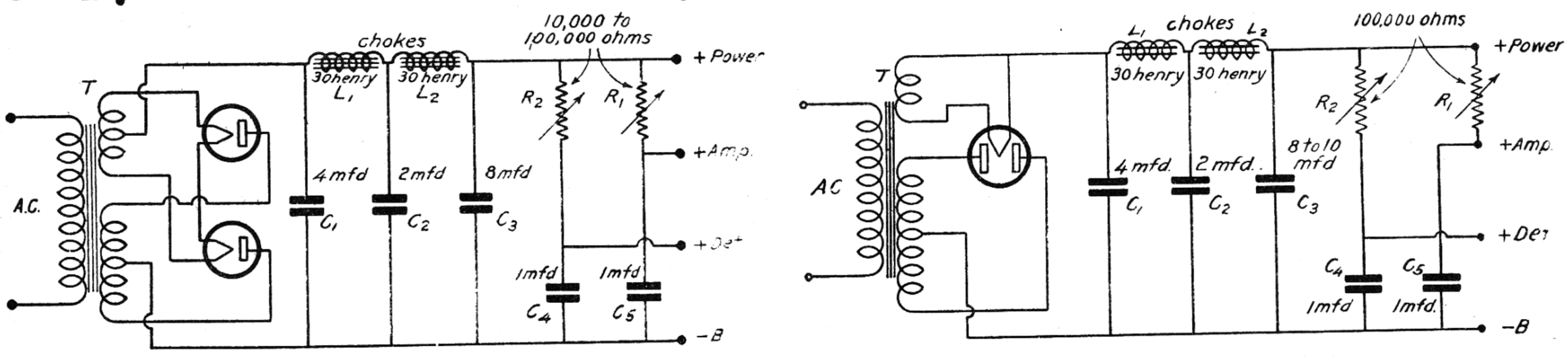

Fig. 26 - "B" Power Supply using two Half-Wave Filament Type Rectifiers for Full-Wave Rectification.

Fig. 27 - (right) Full-Wave Rectifier Circuit for "B" Supply using Filament Type of Tube.

Majestic "B" eliminators employing a full-wave gas-type rectifier. Analysing these, we find them composed of input transformer, buffer condensers, rectifier, filter condensers and chokes, and voltage-control resistors. A condenser, connected between one side of the 110-volt line and ground, is also indicated. The two buffer condensers, connected across each half of the transformer secondary, have a capacity of

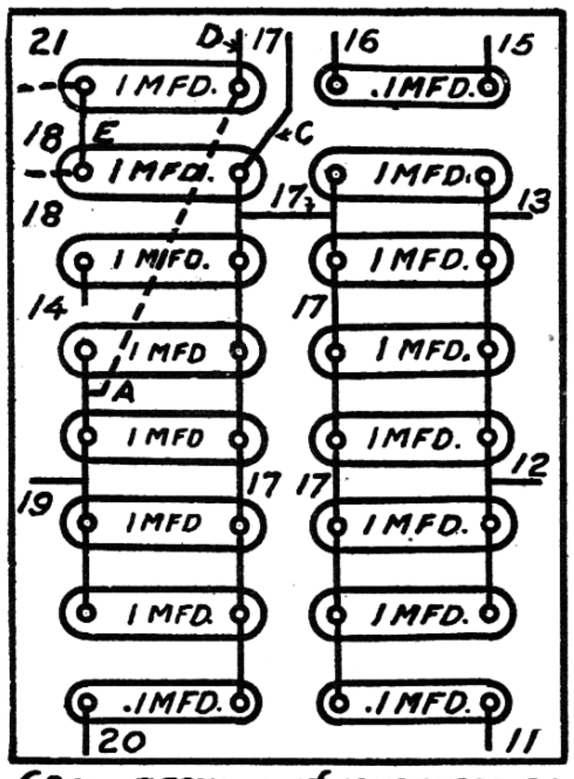

CROSS SECTION OF CONDENSER BANK.
1-ABOVE CONNECTIONS CONNECT TO OTHER APPARATUS ACCORDING TO NUMBER DESIGNATION.
2- IN SPECIAL MASTER CONDENSER STRAP "A"-"B" IS NOT SHOWN OR USED. LEAD "C" IS CONNECTED TO LEAD "D". LEAD "E" IS REMOVED AND WIRING TO THESE TWO UNITS IS THEN MADE AS SHOWN BY DOTTED WIRING "18 & 21".
3 IN ALL OTHER MODELS USE STRAP "A"-"B" AND ALL WIRING SHOWN AS SOLID. (NOT DOTTED).

"NOTE"
THE WIRING ON CONDENSER BANK AS SHOWN ON CROSS SECTION VIEW IS ALL CONCEALED WITHIN THE BANK

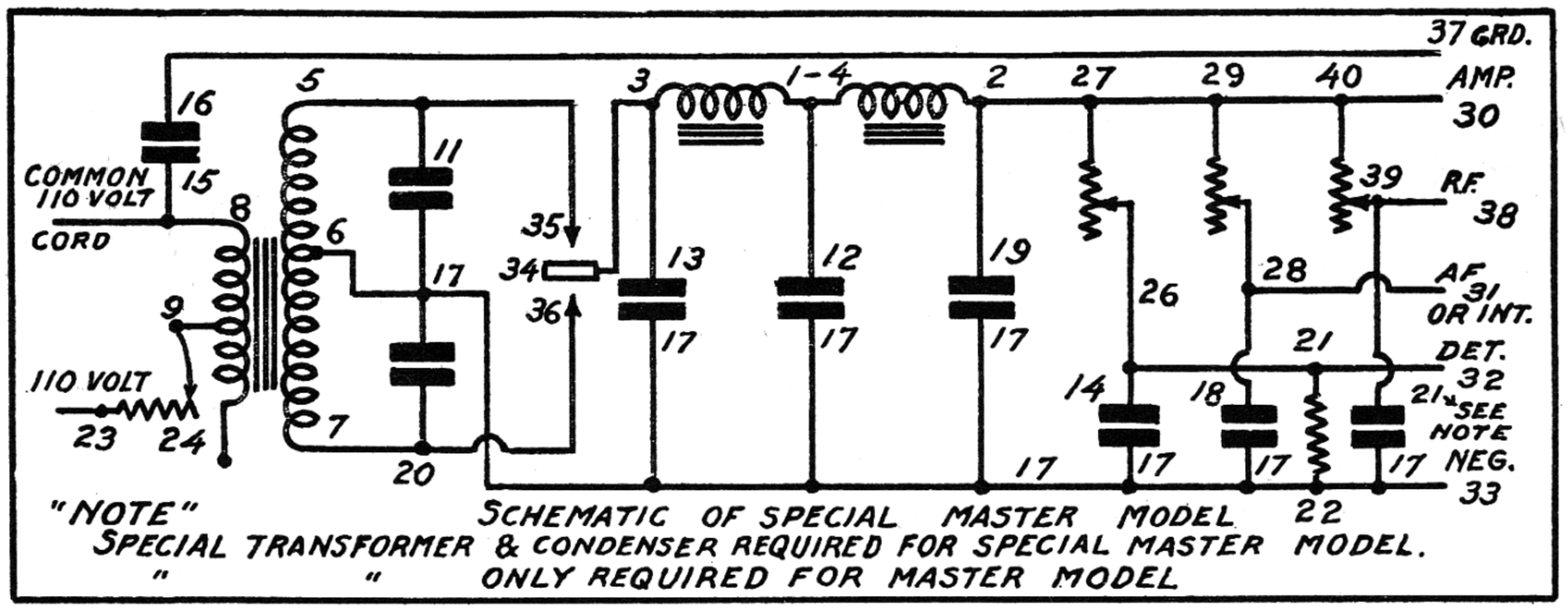

"NOTE"
SCHEMATIC OF SPECIAL MASTER MODEL
SPECIAL TRANSFORMER & CONDENSER REQUIRED FOR SPECIAL MASTER MODEL.
" " ONLY REQUIRED FOR MASTER MODEL

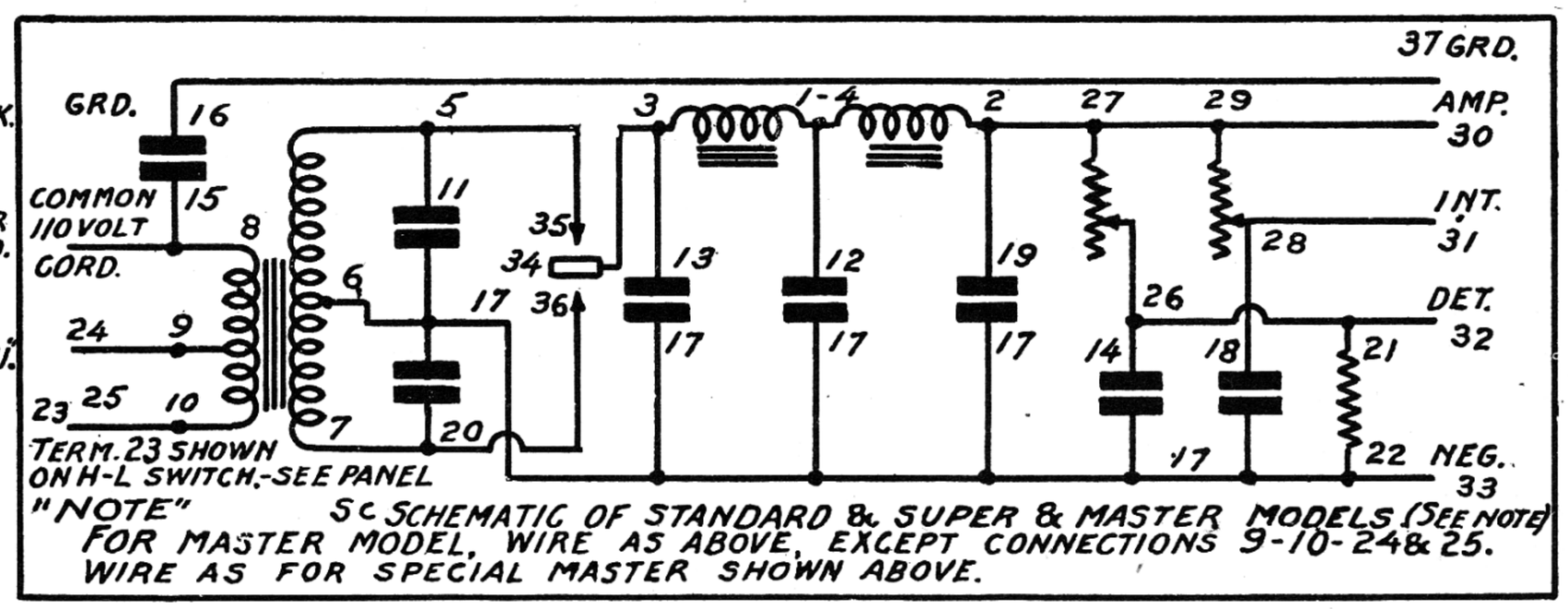

"NOTE"
SCHEMATIC OF STANDARD & SUPER & MASTER MODELS (SEE NOTE)
FOR MASTER MODEL, WIRE AS ABOVE, EXCEPT CONNECTIONS 9-10-24 & 25.
WIRE AS FOR SPECIAL MASTER SHOWN ABOVE.

Fig. 28 - Diagram of Majestic "B" Eliminators.

o.1-mf each. They are used to absorb or prevent any high-frequency parasitic oscillations across the rectifier tube and are used only with gas-type rectifiers.

(12) Dry-Disc Rectifiers. These can be obtained to plug into the regular socket of the commercial "B" eliminator, without any changes in the internal wiring. Therefore, special circuits will not be given showing their use.

(13) "B" Eliminator Troubles. The most common cause of trouble in a "B" eliminator that fails to work is a shorted filter condenser. Therefore the first thing to do is to turn off the current, open the case, and test each condenser for shorts. The shorted condenser can be clipped out of the circuit and the eliminator put back in service again for temporary use, with only a possible slight increase in hum. It is important, however, to replace the condenser with a new one as soon as possible. The next source of trouble is usually found in the control resistors. If the detector voltage is high, the resistor connecting the detector tap to the negative side of the circuit is open. By measuring the output voltages with a high-resistance voltmeter, a defective resistor can easily be located. Continuity tests will indicate the condition of the choke coils and transformer windings. Slow starting, irregular operation or low voltage output, indicates a defective rectifier tube. The Raytheon should give about 4000 hours service, after which the voltage output will gradually drop off. By readjustment of the resistors, the voltage can be brought back and the tube used a considerable length of time before discarding it. "Hum" indicates a shorted filter coil or buffer condenser.

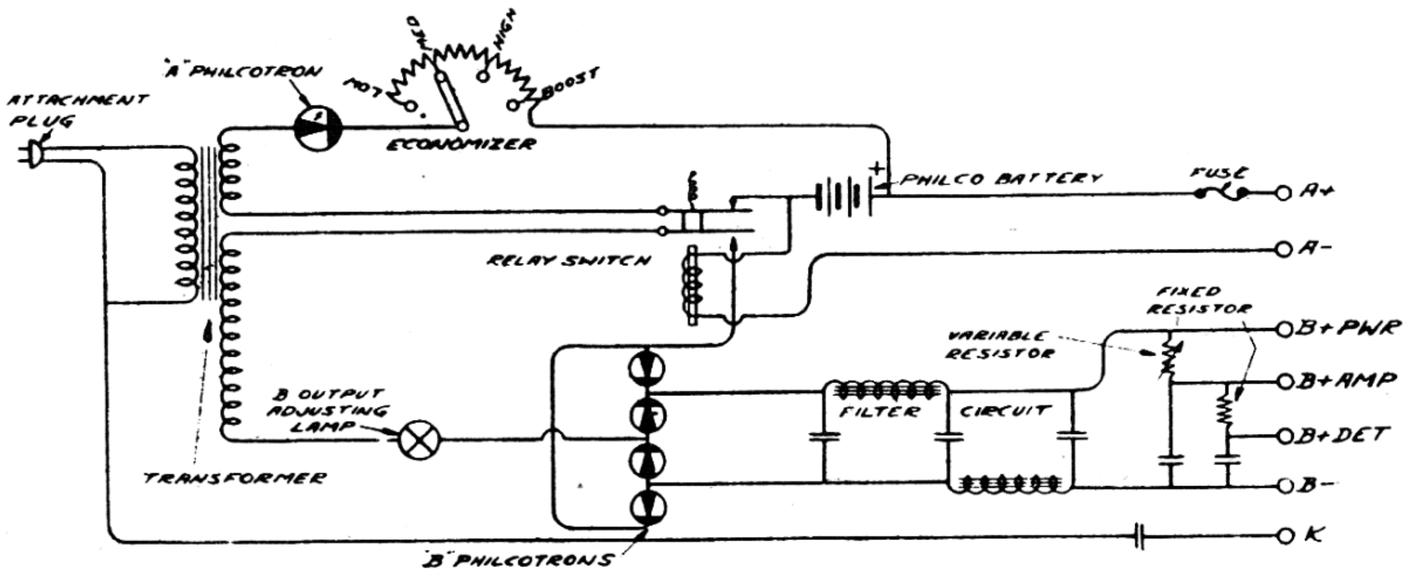

Fig. 29 - Philco AB Socket Power Types AB-656 and AB-652.

(14) Motorboating. Motorboating is a common occurrence when using "B" eliminators,

and is important enough to be considered separately. It produces a "put-put-put" sound in the speaker, similar to that of a small gas engine, from which it gets its title. It is in reality a low-frequency oscillation caused by the combined circuits of the eliminator and set. A different type of eliminator may prevent it, or the use of a separate 45-volt battery for the detector, connected between the negative side of the eliminator and the detector terminal of the set; in which case the "Detector" terminal of the eliminator is not used. Sometimes it may be stopped by reversing one of the transformer windings in the audio-frequency amplifier. In resistance-coupled amplifiers, it is best to remove the first stage and insert in its stead an audio transformer. Sometimes a large by-pass condenser added to the eliminator output (especially the detector output) will prevent it.

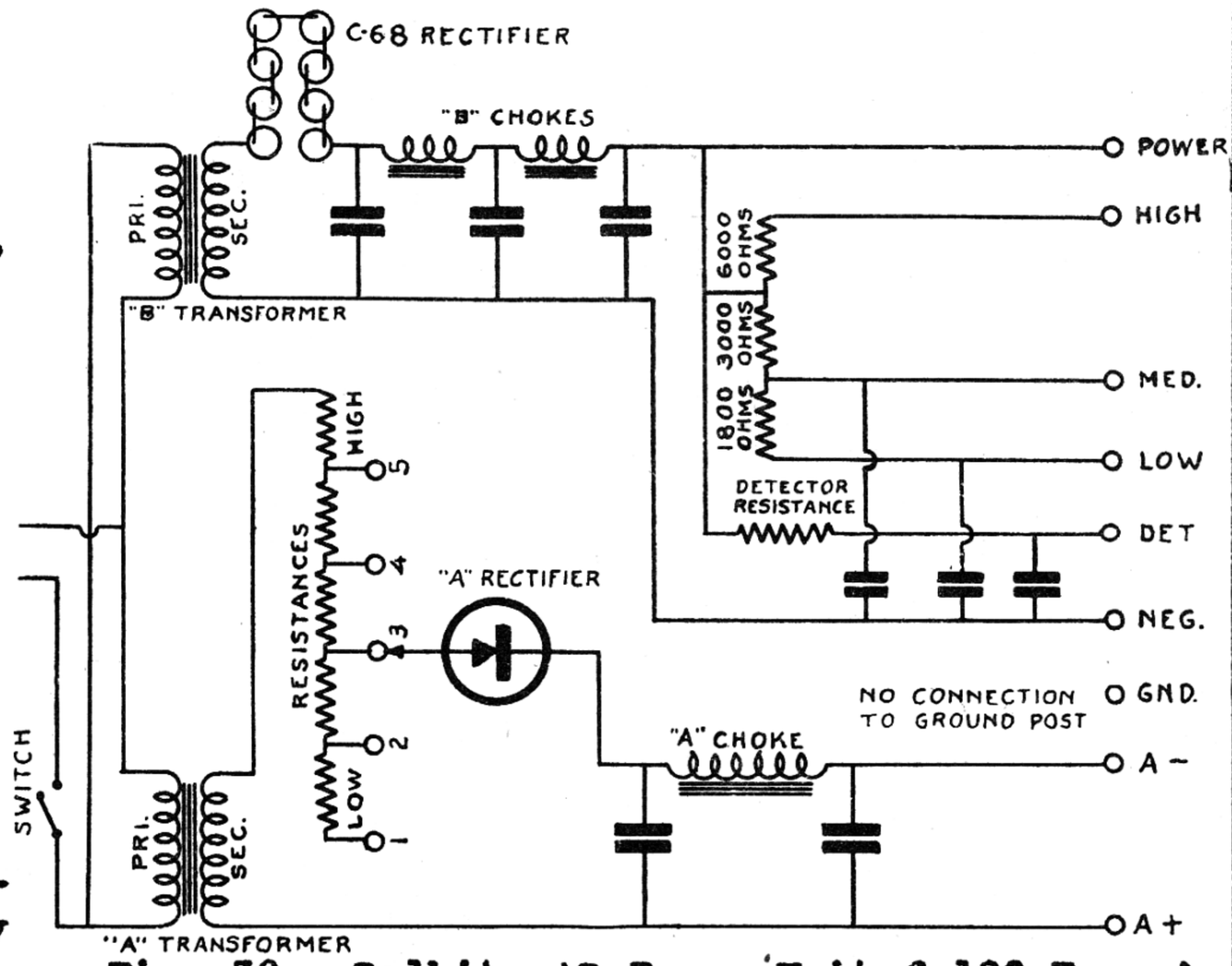

Fig. 30 - Balkite AB Power Unit 6-180 Form A.

(15) Combined "A" and "B" Eliminators. A combined "A" and "B" eliminator is merely the combination of the subjects we have just discussed, and a detailed analysis need not be given. Circuit diagrams, Figs. 29 and 30, showing the Philco and Balkite "AB" socket-power units, are given, however; the illustrations being self-explanatory.

(16) Power Packs. Power packs are made in many forms to suit different set conditions, but they are all fundamentally the same and have the same inherent characteristics. The power pack is a combination of parts designed to furnish the set with plate, grid, and filament voltages for A.C. tubes and is built in a unit separate from the set. It is thus distinguished from electric sets in which the power-supply system is an integral part of the set. We might appropriately call them heavy-duty "B" eliminators. In addition to furnishing plate, grid and filament voltages for A.C. tubes, some power packs also contain a stage of audio-frequency amplification - the output stage - of

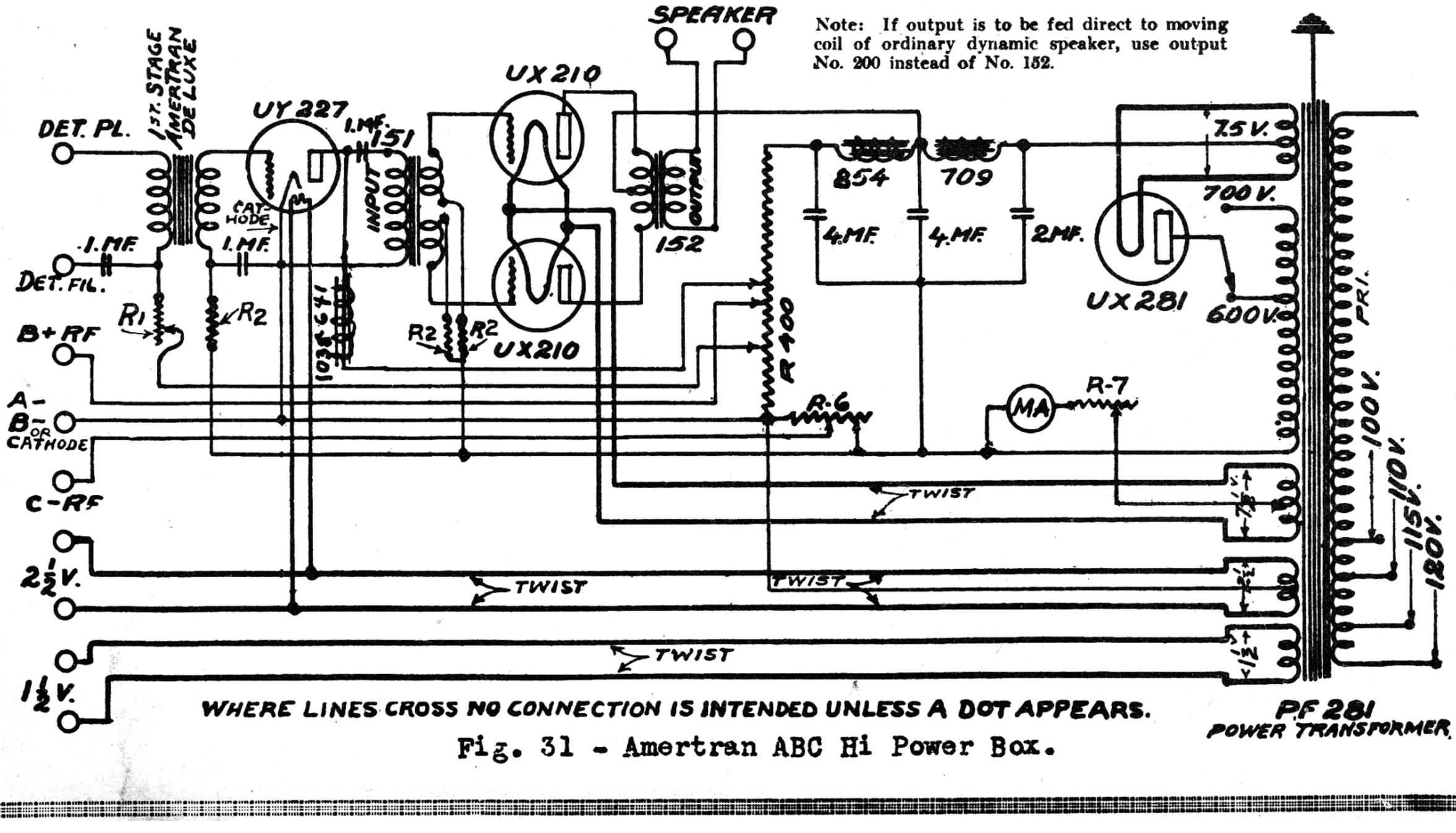

Fig. 31 - Amertran ABC Hi Power Box.

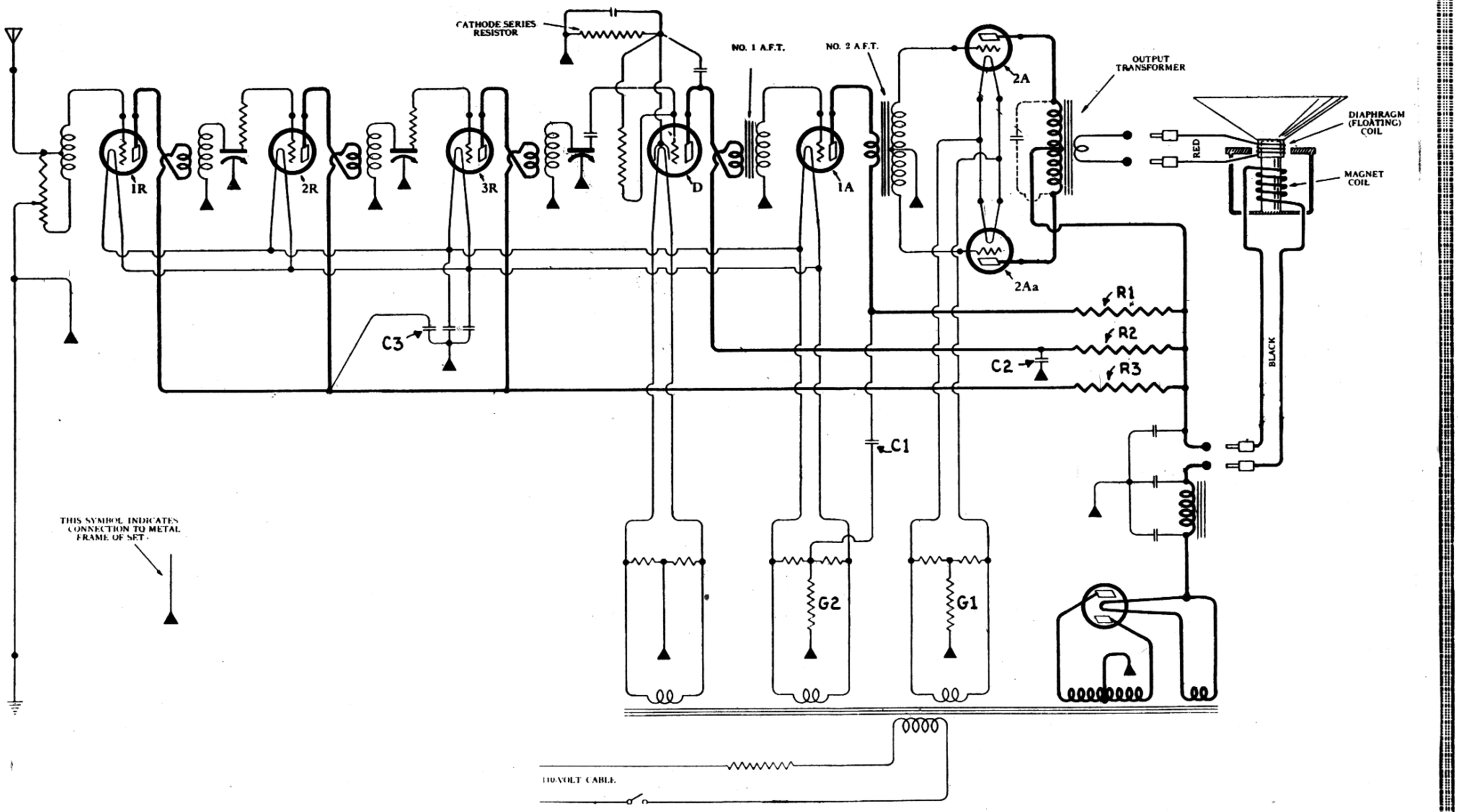

Fig. 32 - Atwater Kent Model 43 Set and Power Unit.

type '71, '10, '45 or '50, singly or in push-pull. A power pack of this type may be connected to the output from the first audio stage of any broadcast receiver and deliver a high-quality output of sufficient power to operate a dynamic speaker. Since servicing of power packs is identical with servicing power-supply systems in A.C. sets, we will describe this phase of the subject collectively at the end of this chapter. Fig. 31 shows the connections of the Amertran "ABC Hi-Power Box." Note that two audio stages are included, allowing the pack to be connected to the detector output of the receiver. A half-wave, type '81 rectifier tube is used. Note the connection between the two filter chokes to obtain the high-voltage plate supply for the two type '10 push-pull tubes.

(17) "Glow" Tube. It seems fitting to briefly describe the type '74 glow tube employed in many power packs to maintain a constant voltage output of 90 volts for the tubes of the set requiring this voltage. This tube will remedy much trouble from unstable A.C. supply. It is connected between the "B" negative and intermediate (90-volt) terminals, usually in series with a ballast resistor to maintain a constant current flow of 60 milliamperes through it. Characteristics of this tube are given in the tube chart, elsewhere in this book.

(18) Power Supply Systems. There are slight differences in the methods of obtaining plate and grid-bias voltages in the sets whose diagrams are included in this book. These differences, or rather methods, should be understood when making measurements, especially voltmeter readings, in order to be sure that the desired voltage supply leads will be found. Fundamentally, these power-supply systems are the same as those employed in "B" eliminators and power packs described previously. However, we shall point out a few of the variations in them, as designed by different set manufacturers.

(19) Plate-Supply Power. The main differences in plate supply appear in the voltage divider, or resistance network system. For example, Fig. 32 shows the diagram of the Atwater Kent "Model 43" set and power unit. Note that separate resistors (R1, R2 and R3) are used to obtain plate voltages for the first audio, detector, and R.F.amplifier tubes respectively. The resistances are by-passed by the condensers C1, C2 and C3.

With this arrangement, the only drain on the plate supply system is that due to the current consumption of the tubes. This method has certain advantages; if one resistor burns out it will not greatly affect the others. In this set, the field coil of the dynamic speaker serves as a filter choke; this is clearly indicated in the diagram. Series-resistance voltage dividers are more generally used, as indicated in the various diagrams of "B" eliminators and power packs; Fig. 33 shows the Steinite "Model 40" power pack which is representative of this method. In this case the voltage divider may be considered as one resistance, with taps taken off at the required voltage points. In this case the dynamic speaker's field winding is also used as a filter choke. The arrangement of chokes and condensers in the filter also varies in different sets - another reason why the diagram of the set should be studied before making measurements.

(20) Grid-Bias Voltage. The method of obtaining grid-bias voltage for the various tubes is fundamentally the same in all electric sets. Use is made of the voltage drop caused by the plate current of the tube flowing through a resistance. Knowing the plate current of the particular tube, the resistance can be calculated to give the desired drop. The "C" bias resistor is connected between the tube filament (or the center-tapped resistance connected across the filament, in the case of the '26 tube or power tubes; or the cathode in heater-type tubes) and the extreme negative end of the power-supply system. This is shown in the simplified diagram of Fig. 34. In the diagram of Fig. 32 the bias voltage for the power tubes is obtained by the drop across the grid resistance G1: that for the first audio and the R.F. stages is obtained by means of the resistance G2. In the diagram of Fig. 33 the 1190-ohm resistance furnishes the grid bias for the '71A power stage. These bias resistorsare sometimes in the power pack and sometimes in the set (or in both) and they should be located before taking grid voltage measurements; although the bias voltage may be obtained by connecting the voltmeter between the grid terminal of the set and the center-tap in the filament circuit of the same tube, or the cathode in heater-type tubes. An

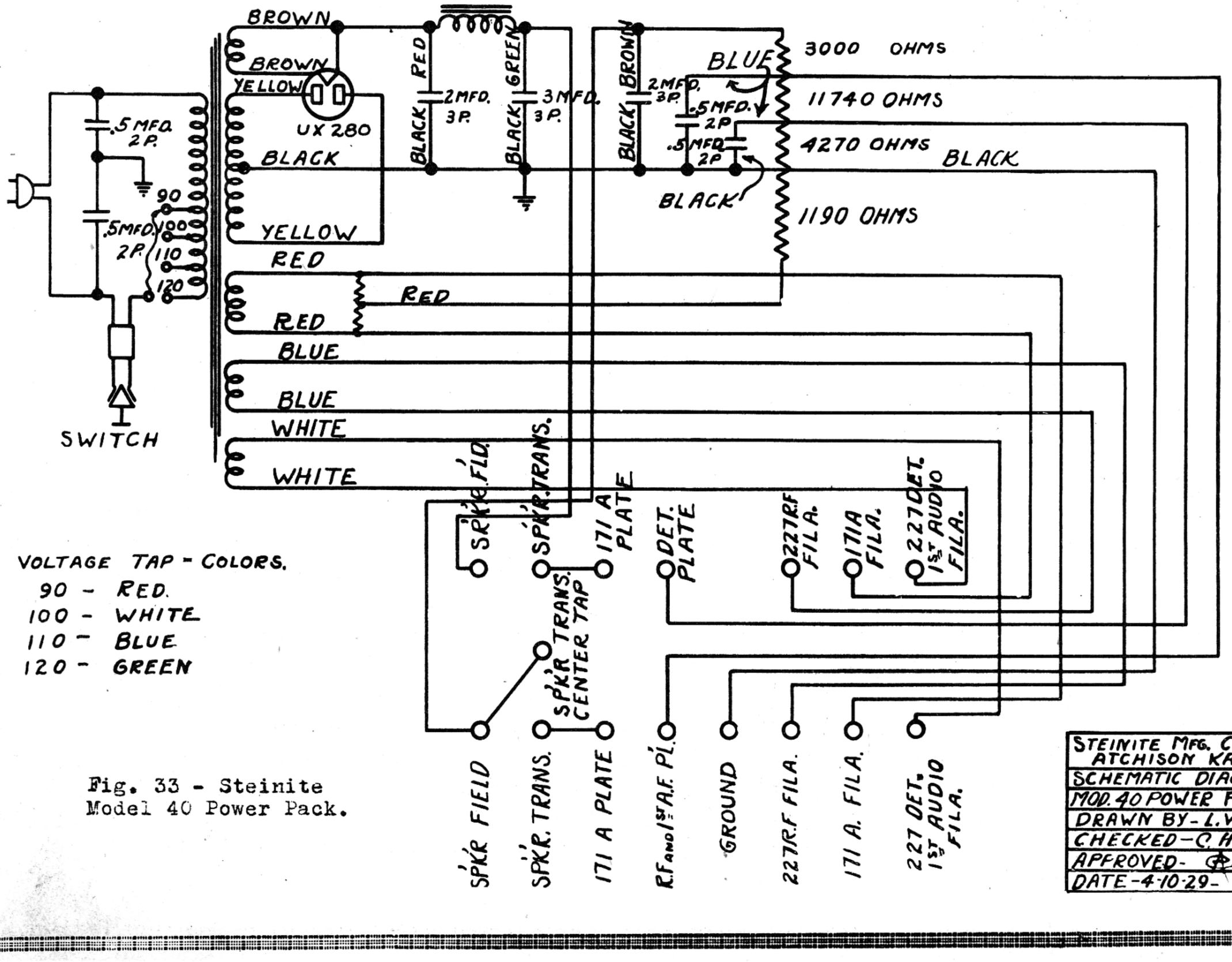

VOLTAGE TAP - COLORS.
90 - RED.
100 - WHITE
110 - BLUE
120 - GREEN

STEINITE MFG. CO. ATCHISON KANS.
SCHEMATIC DIAGRAM
MOD. 40 POWER PACK
DRAWN BY - L.V.A.
CHECKED - C. Hill
APPROVED -
DATE - 4-10-29 -

Fig. 33 - Steinite Model 40 Power Pack.

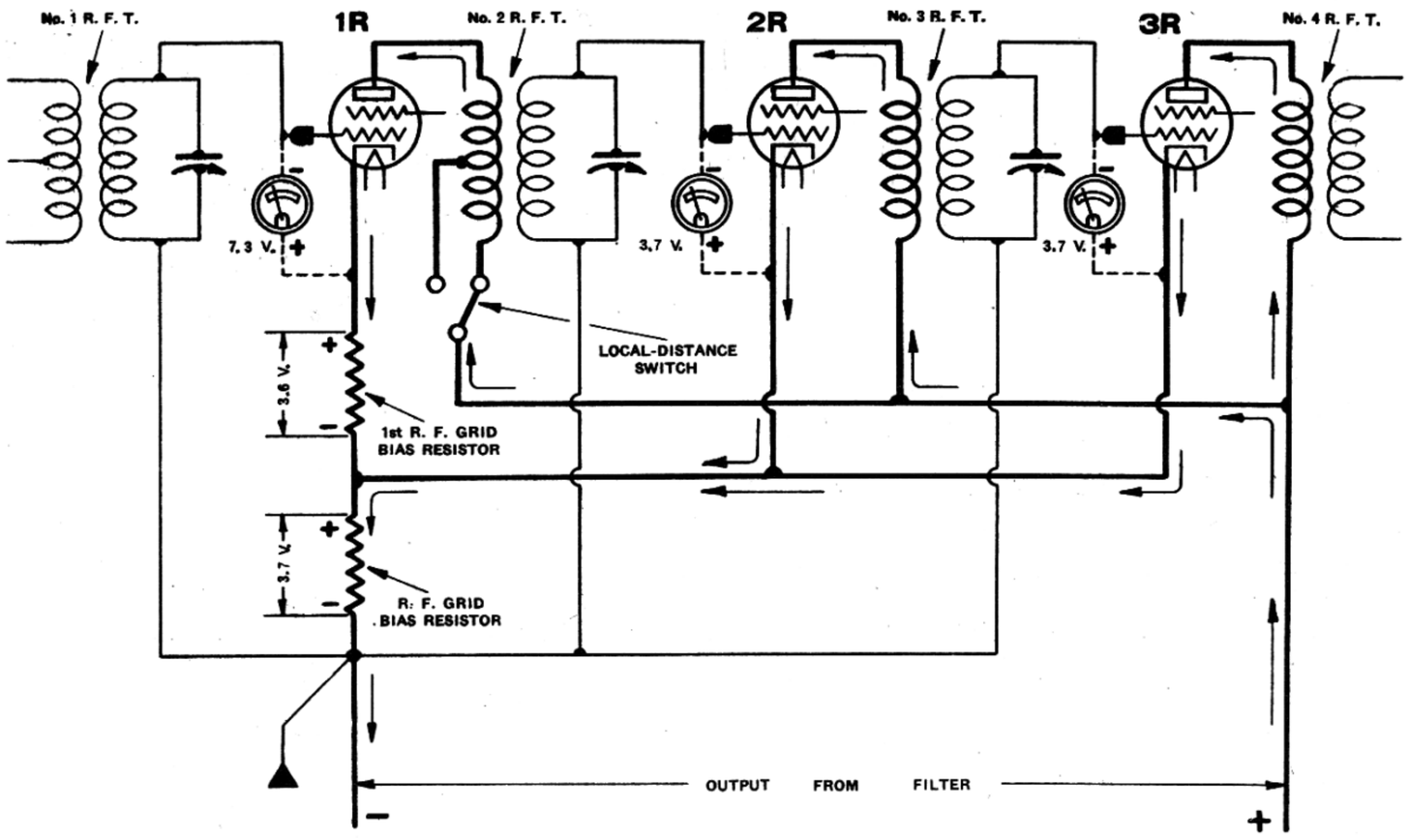

Fig. 34 - Circuit showing how Grid Bias Voltages are obtained in the Atwater Kent Model 60.

interesting departure is illustrated in Fig. 35; this simplified circuit shows how the second A.F. bias voltage in the Atwater Kent "Model 66" is obtained from the drop across the speaker's field coil, in the negative side of the filter circuit. It is imperative that the grid-bias resistance is by-passed by a suitable condenser to prevent feed-back, howling and hum.

(21) Filament Voltage. Regardless of the type of tubes used, the filament supply system is very simple; raw alternating current being used on all filaments. The correct voltage and current outputs are taken from secondary windings on the main power transformer or, in some cases, from a separate filament transformer. Connections are made to the electrical centers of the filament windings by means of center taps on the windings or center-tapped resistors connected across the windings. In many cases, hum is caused by not having the correct center tap; this center-tapped resistor or potentiometer should be carefully adjusted until minimum hum is heard in the loud speaker.

(22) Power-Supply Troubles. Troubles in power-supply systems are not very difficult to locate if we proceed in a systematic manner. Knowing the main sources of troubles and their corresponding symptoms, we can trace back and find the detailed faults probably in less time than it takes to read this paragraph. Therefore a complete detailed analysis is deemed unnecessary and we limit ourselves to generalizations only. Faults in power-supply systems manifest themselves in producing either:

(a) A.C. Hum,
(b) Wrong Supply Voltage,

or both; one usually accompanying the other. Many things can happen to the system that will produce the above effects. By testing each part of the apparatus in turn, the fault is soon located.

(23) A.C.Hum It is taken for granted that previous tests on the set show that the trouble exists somewhere in the eliminator. If the hum is slight, it may be caused by poor shielding, or proximity of the power transformer to the set, or induction from some part of the A.C. line into the set. Sometimes reversing the A.C. line plug will reduce hum slightly. A general cause of hum is found in wrong "C" bias voltages, poor adjustment of the center-tapped filament potentiometers, or open or shorted by-pass condensers across these resistors. In the

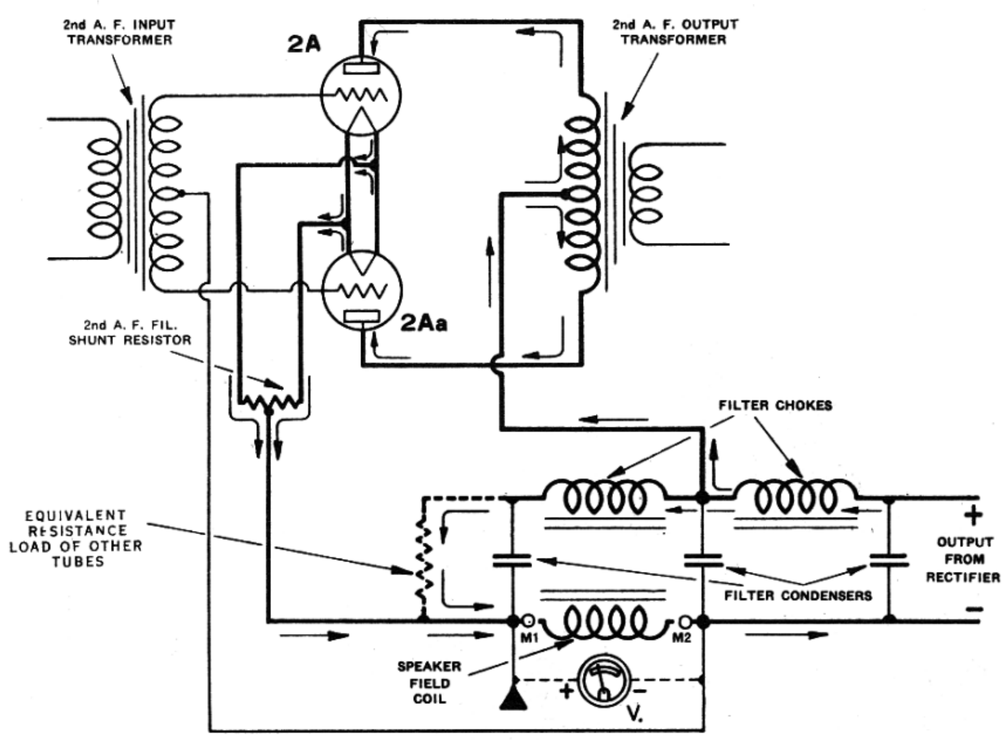

Fig. 35 - In the Atwater Kent 66 the drop across the speaker field coil gives the grid bias voltage of the 2nd A.F. tube.

type '26 tube used for radio and audio amplifiers, an accurate center tap on the filament circuit is important. An open filter condenser or a shorted choke coil will also cause poor filtering with a resultant hum. A poor rectifier tube will produce hum. Mechanical hum may be produced by vibration of the transformer core. Continuity tests on the coils and condensers, and voltmeter readings of the different output voltages, will locate the trouble.

(24) Wrong Supply Voltage. In this case, the line-voltage should be checked, adjusted if necessary by the line ballast resistance or taps on the transformer primary. After this is ascertained, the trouble may be found in an open resistor in the voltage divider. This is a common occurrence. The next most likely place is in the filter condensers; the one connected directly across the rectifier output usually punctures first, as it is under the influence of the hightest voltage. Of course a wrong load on the system will upset the various voltages; since we are assuming that the set is all right, this may be caused by a short circuit. In making voltage readings, it is important to use a high-resistance meter, otherwise the load placed on the system by the current consumed by the meter will upset the system and give erroneous values. A shorted filter coil, or an open coil, will cause too much voltage or give no output at all. Continuity tests will indicate the condition of the various parts. It is always well to compare the rectifier tube with a new one; as these tubes have a limited life. The resistance, condenser, and choke values should be compared with those specified by the manufacturer, to make certain that someone hasn't inserted wrong parts.

(25) Motor Generators. A.C. electric sets are sometimes operated on D.C. lines by means of motor generators or rotary converters, which change the 110-volt direct current to 110-volt, 60-cycle A.C. form. Aside from the additional cost and noise incurred by the use of the machine, the results obtained are superior to those obtained from D.C. sets. The rotary converter type, although very quiet in operation, should be installed in a closet or some distant place where it cannot be heard. These machines are furnished with a filter for eliminating commutator or line noises, the final result being quieter operation than is usually obtained on the normal 110-volt A.C. line. Both input and output sides of the motor generator or converter should be filtered, as shown in the illustration, Fig. 36. Troubles in these machines are those inherent to any motor or generator. Barring abuse, they should last a long time with only an occasional oiling of the bearings.

The brushes also need repair and replacing occasionally. In one instance, a Service Man reported trouble from brushes which were completely worn down to the brush holders - and these caused excessive grooves in the commutator. The commutator had to be removed and turned down on a lathe before the machine could be placed in service again.

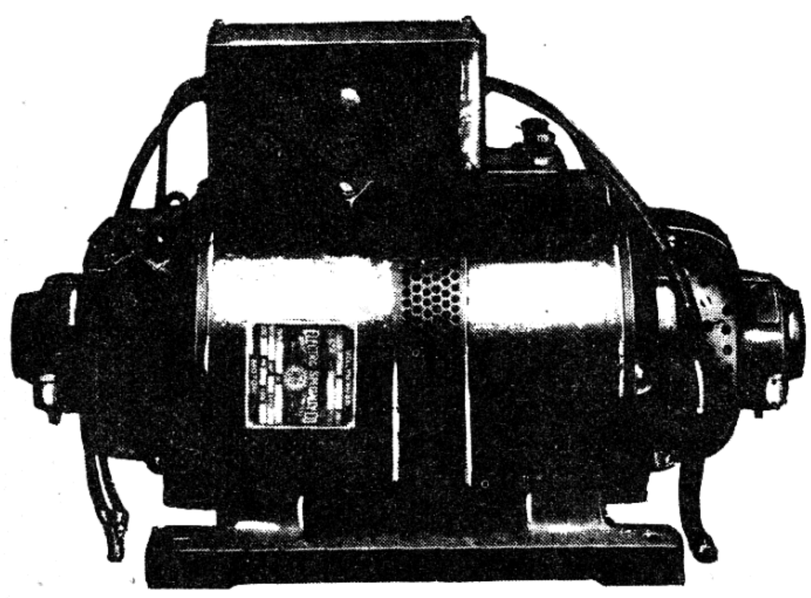

MOTOR GENERATOR WITH FILTER FOR RADIO RECEIVERS

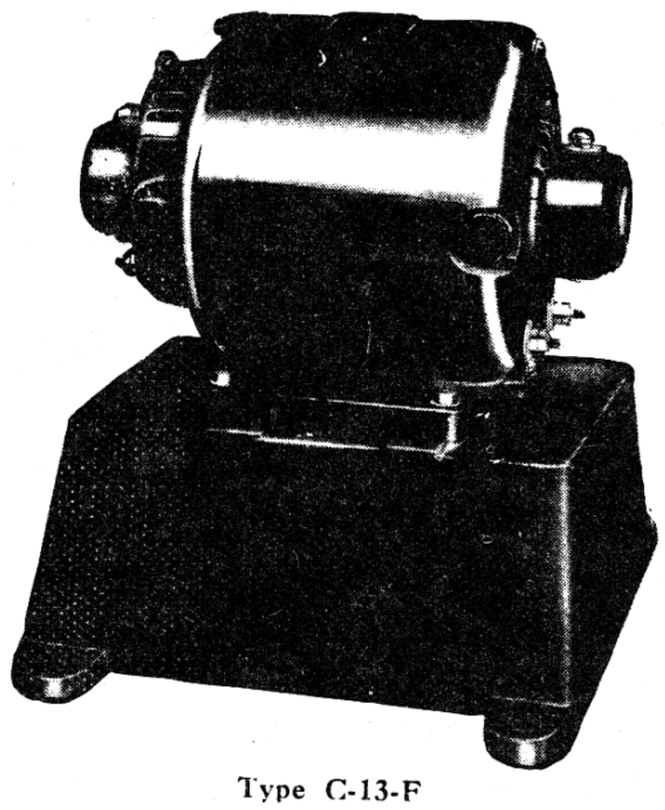

Type C-13-F

Fig. 36 - At the left is shown the "ESCO" motor generator. The illustration at the right is that of the "JANETTE" rotary converter. Note the size of the filters used in connection with these machines. These instruments supply 110 volts A.C. from the 110 volt D.C. line.

AntiqueRadioSchematics.org
Publication Digitized and Provided By
Steve's Antique Technology
Vintage Schematics and Publications
www.StevenJohnson.com
Free Download - Not For Resale

AntiqueRadioSchematics.org

Publication Digitized and Provided By
Steve's Antique Technology
Vintage Schematics and Publications
www.StevenJohnson.com
Free Download - Not For Resale