DU MONT MODEL 275-A

FREQUENCY RESPONSE 2 cps to 30,000 cps
Circular Sweep Voltages are furnished from the external two-phase generator provided
Circle Diameter Adjustable from 0 to 4½ inches

DEFLECTION FACTOR Less than 0.4 volt rms produces deflection to center of circle

LINE RATING 115-230 volts, 50-60 cps

TUBE COMPLEMENT

Type	*Function*
6SL7-GT (V1)	Vertical Input and Phase Inverter
6SJ7 (V2)	Vertical Output
6SJ7 (V3)	Vertical Output
6SL7-GT (V4)	Horizontal Input and Phase Inverter
6SJ7 (V5)	Horizontal Output
6SJ7 (V6)	Horizontal Output
6SN7-GT (V7)	Radial Amplifier
6SN7-GT (V8)	Radial Amplifier and Cathode Follower
5CP1 (V9)	Cathode-Ray Tube
2X2-A (V10)	High-Voltage Rectifier
2X2-A (V11)	High-Voltage Rectifier
5Y3-GT (V12)	Low-Voltage Rectifier
6X5-GT (V13)	Negative-Voltage Rectifier
OC3 (V14)	Voltage Regulator
OC3 (V15)	Voltage Regulator

The schematic circuit diagram of Model 275-A is shown in Fig. 22-17. This instrument is of special design and construction designed primarily for the study of the various characteristics of rotating machinery. The time base in this instrument is circular and is produced in synchronism with the rotation of the machine being studied. The characteristic of the machine to be examined may be transformed into an electrical signal by means of a suitable device, and be applied to the input terminals. Its salient features will be plotted on the screen, and the relative position in the rotary cycle may be determined from the pattern.

X- and Y-Axis Amplifiers

The X and Y amplifiers are identical. Their purpose is to amplify the two 90° out-of-phase voltages furnished by the external two-phase generator. The generator voltages pass through "avc" networks composed of *R4, C2,* and *R22, C8,* before they reach the grids of the X- and Y-amplifier tubes.

These networks are essentially low-pass *R-C* filters with resistance *R* much greater than the capacitive reactance in the frequency range from 5 cps and up (corresponding to generator speeds above 30 rpm). They reduce harmonics in the generator outputs to a greater degree than the fundamentals, producing relatively pure sine-wave voltages at the inputs of amplifiers *V1* and *V4*. The low-pass networks also serve to maintain constant input voltages to the amplifiers over this same frequency range, and to maintain a 90° phase shift between generator voltages and amplifier input voltages.

Z-Axis Circuits

Modulating or timing signals may be connected to the grid of the cathode-ray tube through capacitor *C1*. The high-input resistance provided by *R1* results in negligible loading upon the signal source. A peak-to-peak signal of 45 volts is sufficient to drive the cathode-ray tube between the limits of cutoff and zero bias, so that satisfactory beam blanking can be expected from signals having considerably small amplitude.

Radial Deflection Circuits

Radial deflection of the fluorescent spot on the screen is provided by modulating the screen grids of the deflection amplifiers, *V2, V3* and *V5, V6*. The input to the radial amplifier may be made at terminals *J7* and *J8*, or connector *J10* to a cathode-follower stage (*V7*, 1st section). The output from the cathode follower is amplified by *V7* (2nd section) and fed to both grids of dual-triode *V8*. Outputs from the *V8* plates are fed, in turn, to the screen grids of the X- and Y-axis deflection amplifiers, modulating their outputs accordingly. The radial amplifier requires less than 0.4 rms volts at the input to produce deflection on the screen equal to the circle diameter.

DU MONT MODEL 279

FREQUENCY RESPONSE
Vertical Amplifier 10 cps to 100,000 cps, within 1 db
Horizontal Amplifier 10 cps to 50,000 cps, within 1 db
Sweep Circuit 2 to 30,000 cps

LINE RATING 115-230 volts, 50-60 cps

TUBE COMPLEMENT

Type	*Function*
6H6 (V1)	Voltage Calibrator
6J5 (V2)	Vertical Input Cathode Follower
6AG7 (V3, V4)	Vertical-Deflection Output
6SN7 (V5)	Single-Sweep Diode, Phase Splitter
6Q5G (V6)	Gaseous Sweep Oscillator
6SL7 (V7)	Sweep Output Cathode Follower
6SN7 (V8)	Flip-Flop Channel *A*
6J5 (V9)	Cathode Follower X_A
6AG7 (V10, V11)	Vertical Output X_A
6J5 (V12)	Cathode Follower X_B
6AG7 (V13, V14)	Horizontal Output X_B
6SN7 (V15)	Sync Input and Single Sweep Bias
6Q5G (V16)	Gaseous Sweep Oscillator
6SL7 (V17)	Sweep Cathode Follower
6SN7 (V18)	Flip-Flop Channel *B*
6J5 (V19)	Cathode Follower Y_B
6AG7 (V20, V21)	Vertical Output Y_B
5SP-A (V22)	Cathode-Ray Tube
5U4G (V23)	Low-Voltage Rectifier
6B4G (V24)	Voltage Regulator
6SJ7 (V25)	Voltage Control Tube
OD3 (V26, V27)	Gaseous Regulators
6X5GT (V28)	Half-Wave Bias Rectifier
3B24 (V29)	High-Voltage Rectifier
2X2A (V30)	High-Voltage Rectifier

The schematic circuit diagram of Model 279 is shown in Fig. 22-18. This instrument is a specialized type intended for laboratory or scientific work. It is a dual-channel instrument, consisting essentially of two oscilloscopes in one, thus permitting comparison of two waveforms on the same or independent time scales. The instrument utilizes the type 5SP dual beam cathode-ray tube.

Circuits

The two guns and their associated signal deflection circuits are referred to in Fig. 22-18 as Channel *A* and Channel *B*, respectively. The X_A channel handles the *A* beam horizontal deflection and the Y_A the vertical deflection for the *A* beam. Similarly, the *B* beam horizontal and vertical deflection are handled by the corresponding X_B and Y_B channels.

The sync input goes to *V5A* which is a phase splitter. *V6* is a 6Q5G gaseous-triode sweep oscillator. *V5B* is used as a single-sweep diode. The output of the sweep tube is fed to a cathode follower consisting of ½ of a 6SL7, *V7A*.

A 6SN7 (*V8* for channel *A*, *V18* for channel *B*), used in a flip-flop circuit with two stable operating points, is triggered by the signal produced in the plate circuit of *V7B* for sweep *A* (*V17B* for sweep *B*). This flip-flop circuit generates the intensifying gate which illuminates the screen of the cathode-ray tube during the single-sweep period and keeps the tube cut off at all other times. The first half-section is biased off by the BEAM GATE BIAS control and the second half-section is conducting normally. This results in holding the cathode-ray-tube grid potential below the cutoff value. The positive gate signal from the plate of *V7B* turns *V8* on and this, in turn, cuts off *V8B* in whose plate circuit a positive gate is hence generated and fed directly to the grid of the cathode-ray tube, thus turning the beam on. Since the beam-gate circuit is directly coupled throughout, the gate will correspond in duration with the waveform fed into the first grid circuit from the plate of *V7B*.

ENCYCLOPEDIA ON CATHODE-RAY OSCILLOSCOPES AND THEIR USES

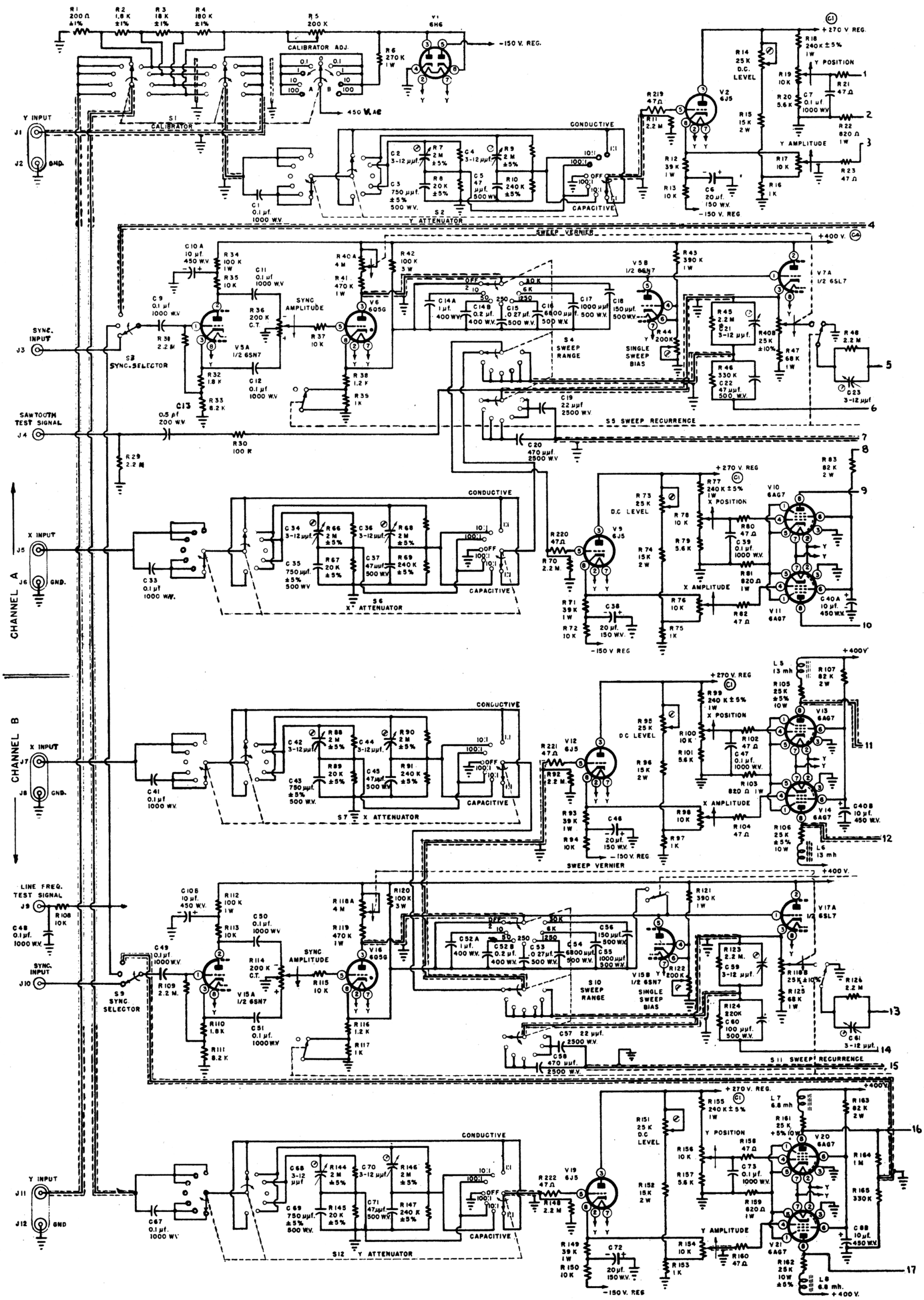

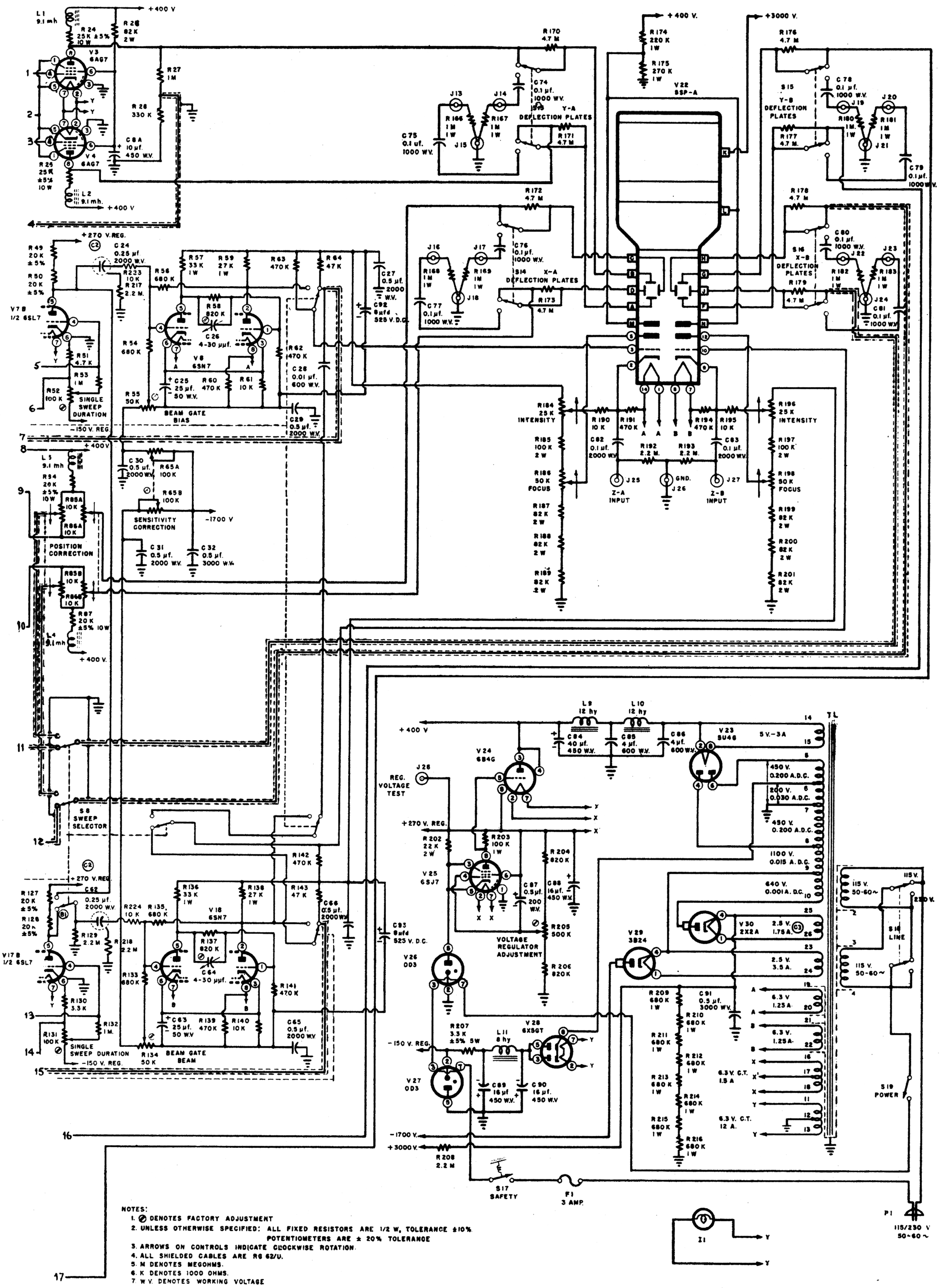

Fig. 22-18.—Schematic of Du Mont Model 279.

Courtesy Du Mont Labs.