MILLEN MODELS P4 AND P4-2
Synchroscope

LINE RATING 117 volts, 60 cps

TUBE COMPLEMENT

Type	*Function*
6SN7 (V1)	Sweep Generator
6SN7 (V2, V5)	Amplifier and Electronic Switch
6SN7 (V3, V4)	Trigger Amplifier
6SN7 (V6)	Amplifier and Trigger Control
6SN7 (V7)	Internal Free-Running Multivibrator
6SK7 (V8)	Vertical Discharge Tube
7V7 (V9)	Intensity Amplifier
6SN7 (V10)	Phase Splitter and Trigger Input Amplifier
2X2 (V11, V12)	High-Voltage Half-Wave Rectifiers
5Z3 (V13)	Low-Voltage Rectifier
5LP1 (V14)	Cathode-Ray Tube

The schematic circuit diagram for Models P4 and P4-2 are shown in Fig. 22-37. The synchroscope has an unusual sweep circuit which may be synchronized to an external positive or negative triggering pulse.

First, pin terminals 2 and 3 of *V2* can be visualized as the plate and cathode terminals of a diode electronic switch. Such a switch conducts a current only when the cathode is negative with respect to the plate. In effect, a generator with its negative terminal connected to pin terminal 3 and positive to ground causes an electron flow through *V2*, 3 to 2, under such conditions. This occurs when the junction of *C14* and *R14* become negative during one-half of the cycle of voltage across the secondary of *T2*.

As a result of the passage of an electron current through 3-2 of *V2*, with switch *S8* thrown to the *up* position on the diagram, the grid of *V3*, pin 1, becomes negative with respect to ground and its cathode. The resulting bias potential on the *V3* grid is capable of cutting off the *V3* plate current and *triggering* the signal or pulse.

During the next half-cycle of voltage across the secondary of *T2*, when the cathode of *V2* is positive with respect to ground and its plate, *V2* does not conduct and there is no bias potential applied to the grid of *V3*, so *V3* functions as an amplifier and transmits the signal to *V4* and the trigger output circuit. *V5*, 2-3, works in a similar manner in conjunction with *V5* terminals 6-4-5. The grid of *V5*, pin 4, goes directly to the plate, pin 2, in the other section of this dual-purpose tube.

During the time that the cathode of *V2*, pin 3, is positive with respect to ground, that of *V5*, pin 3, is negative or of opposite polarity. To change the polarity relationships or phases of the various circuits, *S8* is provided. For the case analyzed, *S8* was thrown to the up position. It is a double-pole, double-throw switch and may be thrown to the down position to change the polarity 180° as described.

V5 works into *V6* which is a cathode-follower output circuit used to drive the vertical plate circuit of the cathode-ray tube. If a positive pulse is applied to the grid of *V6*, no appreciable effect results unless *V6* previously had been cut off by a negative pulse. If this was the case and *C26* was allowed to discharge through the resistance of *V8*, the potential B+ potential is now applied to *C26* through *V6* to replenish the charge and the pulse signal is communicated to the vertical plate circuit of the cathode-ray tube through *C52* which couples the voltage across *V8*.

On the negative half-cycle of input voltage to the grid of *V6*, the tube is cut off and *C26* discharges through *V8*. Normally, *V8* has a resistance inversely proportional to plate voltage but because of the high value of plate resistance in this tube and the further effect of the cathode-circuit resistor which introduces a certain amount of degeneration and stabilizing action, the plate resistance effectively remains constant. *L4* and *C58* form a resonant plate circuit for the multivibrator, coupled through *C57*. The minimum plate-load resistance is set for the most part by *R56*.

V9 is an intensity amplifier tube which transfers a signal to the grid of the cathode-ray tube through *C41*. The input excitation is selected by switch *S3b*. *S2* is a switch which varies the gain of *V9* through selection of various values of input circuit resistances *R50*, *R51* and *R52*. A video amplifier attachment is available for use with the synchroscope and has a top frequency limit of about 5 Mc.

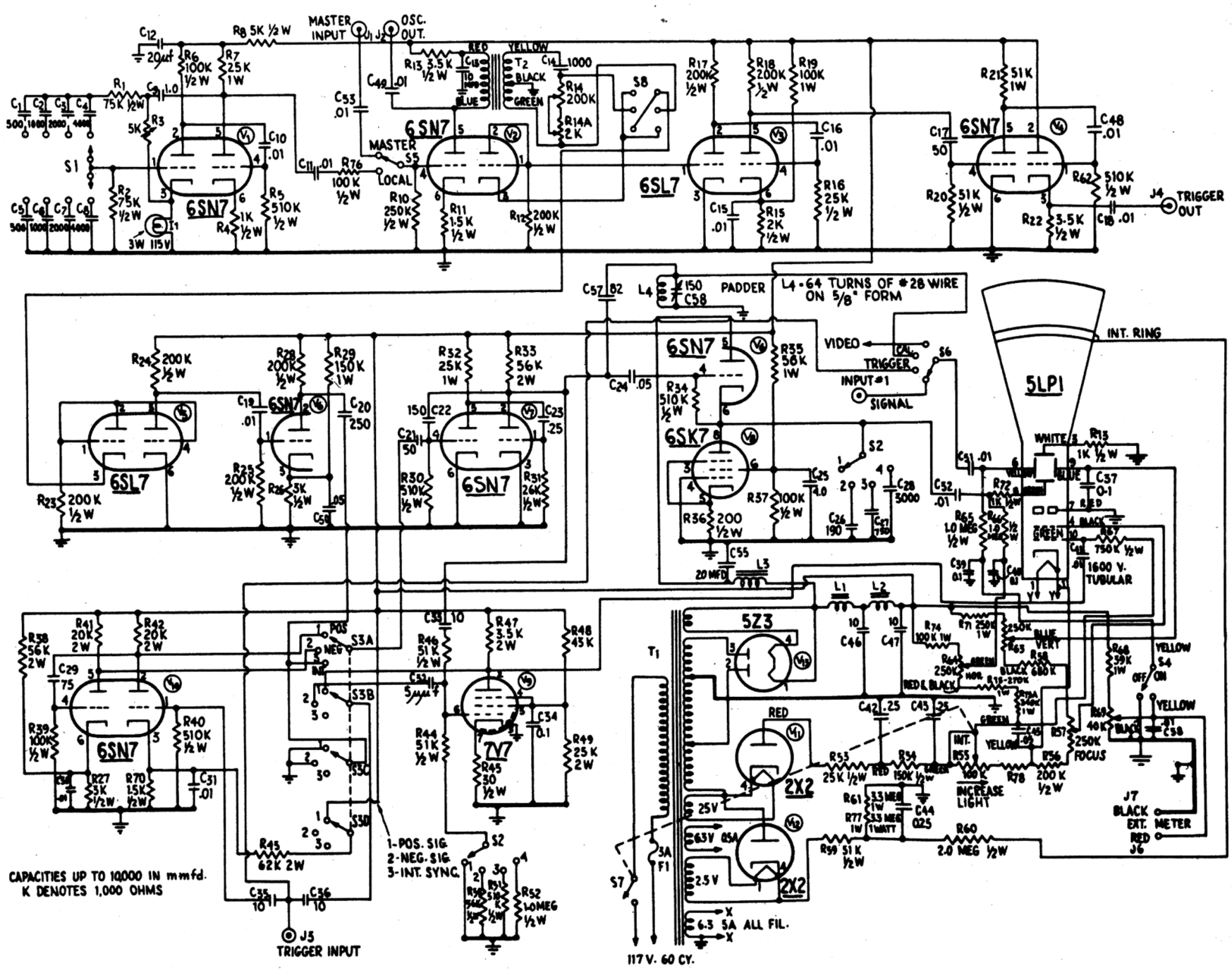

Fig. 22-37.—Schematic of Millen Models P4 and P4-2.

Courtesy Millen Mfg. Co.